REMOTE CONTROL®

Top Quality Valve Actuators
Made in Sweden

RC 1990

Explosion Proof Switch Box

REMOTE CONTROL RC1990 explosion proof Switch Box for extreme environments.

Certified according to:
ATEX 94/9/EC CE 0470 Ex II 2 G D EEx d IIC T4, T5, T6
ATEX 94/9/EC CE 0470 Ex II 2 G D EEx ib IIC T5, T6
GOST R 51330.0-99 / R 51330.1-99

Note: Cable glands in EX design suitable for the cable type and ambient condition and/or plug are a demand for approved application.

The RC1990 is a robust, EX proof Switch Box for extreme environments designed in epoxy coated cast iron for optimal corrosion resistance. Ambient temperatures from +110 °C down to -55 °C, depending on type of switches.

Large screwed lid gives easy access for cable installation and adjustment of switches to the desired positions.

RC1990 switch box has 2 x M20 cable entries for easy connection of signal and control cables. Control cables can for instance be connected to a solenoid valve through the second cable entry. In that way the RC1990 box works both as switch box and junction box at the same time. Additional cable entries on request.

RC1990 follows VDI/VDE 3845 for easy mounting.

Technical Data

- Housing in cast iron, epoxy coated.
  Shaft, nameplate and screws in stainless steel
- Mounting details according to internationell standard VDI/VDE 3845 NAMUR
- Ambient temperatures:
  EEx d -50 °C to +110 °C
  EEx ib -55 °C to +80 °C
- Enclosure IP66 / IP67
- Screwed lid for easy access
- Individually adjustable cams for switch operation
- 12-way terminal strip with screw terminals
- Mechanical switches as standard

Options:

- Proximity sensors
- Up to 4 x cable entries for RC1990 used as switch box
- Up to 7 x cable entries for RC1990 used as junction box only

www.remotecontrol.se

Remote Control Sweden
Tel +46 (0)23 587 00
Fax +46 (0)23 587 45
www.remotecontrol.se
info@remotecontrol.se

Remote Control
Tel +49 (0)2131 795 760
Fax +49 (0)2131 795 7615
www.remotecontrol.de
info@remotecontrol.de

Remote Control Ltd
Tel +44 (0)1889 576 888
Fax +44 (0)1889 577 676
www.remotecontrol.co.uk
info@remotecontrol.co.uk

Remote Control Asia
Tel +65 6848 7150
Fax +65 6746 5815
www.remotecontrol.com.sg
info@remotecontrol.com.sg

Remote Control Inc
Tel +1 (0)401 294 1400
Fax +1 (0)401 294 3388
www.rciactuators.com
info@remotecontrol.us

RC1990 Switch Box - Technical Details

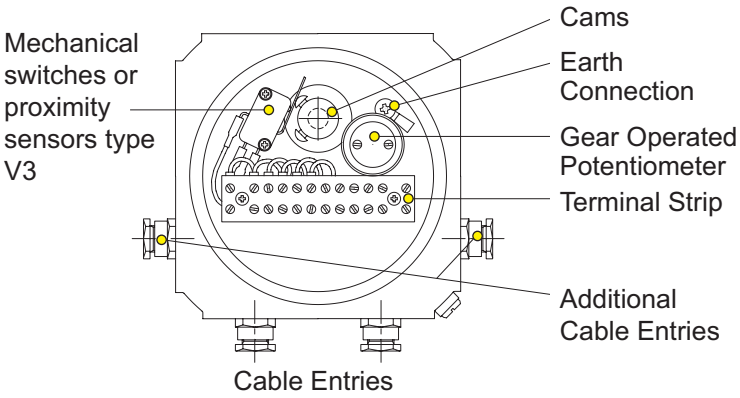

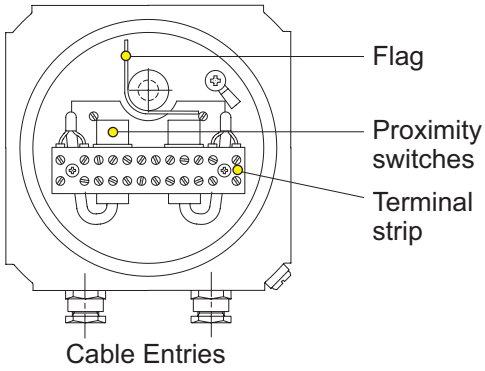

Under

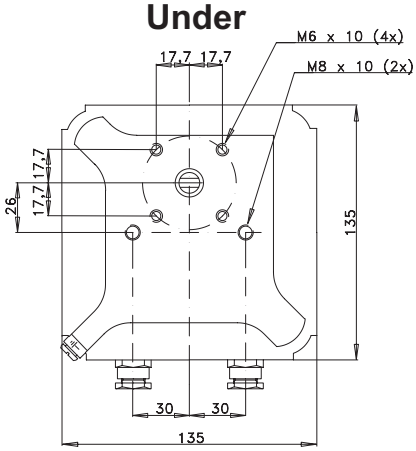

Sideview

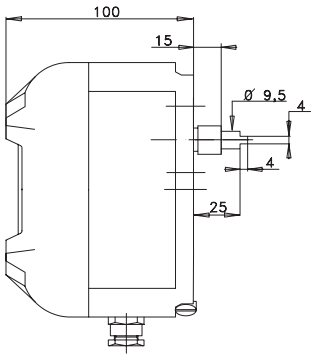

Options

- Up to 4 x SPDT V3 style mechanical switches. 6 amps at 250 VAC.
- Up to 4 x V3 style proximity sensors.
- 1 or 2 x cylindrical proximity sensors.
- Potentiometer, may be combined with up to 3 x SPDT V3 style switches/sensors.
- Transmitter, two and three-wire versions available, may be combined with up to 3 x SPDT V3 style switches/sensors.
- Potentiometer 1k Ohm max 1W.

Standard Wiring Diagram RC1990

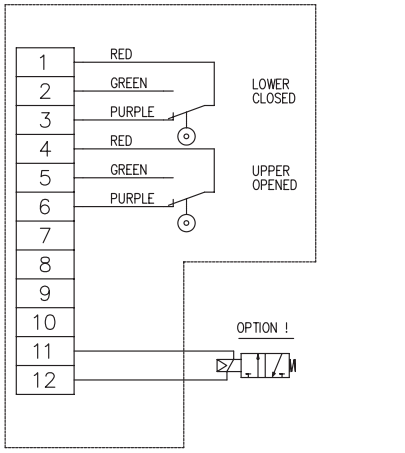

V5J012BB1C 30 V DC / 125V AC 100mA
V5B210CB1C 250V AC 6A, DC 0,25A, 125V DC 0,5A, 24V DC 5A

Ref nr 396F / Art nr 980396

We reserve the right to make changes without notice

www.remotecontrol.se

Remote Control Sweden
Box 80
Kontrollvägen 15
SE-791 22 Falun
Sweden
Tel +46 (0)23 587 00
Fax +46 (0)23 587 45
www.remotecontrol.se
info@remotecontrol.se

Remote Control
Gutenbergstr. 22
DE-41564 Kaarst-Büttgen
Germany
Tel +49 (0)2131 795 760
Fax +49 (0)2131 795 7615
www.remotecontrol.de
info@remotecontrol.de

Remote Control Ltd
Unit 40, Trent Valley Works
Station Road, Rugeley
Staffordshire WS15 3HB
England
Tel +44 (0)1889 576 888
Fax +44 (0)1889 577 676
www.remotecontrol.co.uk
info@remotecontrol.co.uk

Remote Control Asia
No. 9, Kaki Bukit Road 1
#03-03, Eunos Technolink
Singapore 415938
Tel +65 6848 7150
Fax +65 6746 5815
www.remotecontrol.com.sg
info@remotecontrol.com.sg

Remote Control Inc
PO Box 355
386 Dry Bridge Rd
North Kingstown, RI 02852
USA
Tel +1 (0)401 294 1400
Fax +1 (0)401 294 3388
www.rciactuators.com
info@remotecontrol.us